Photoelectric Effect Apparatus

Equipment List

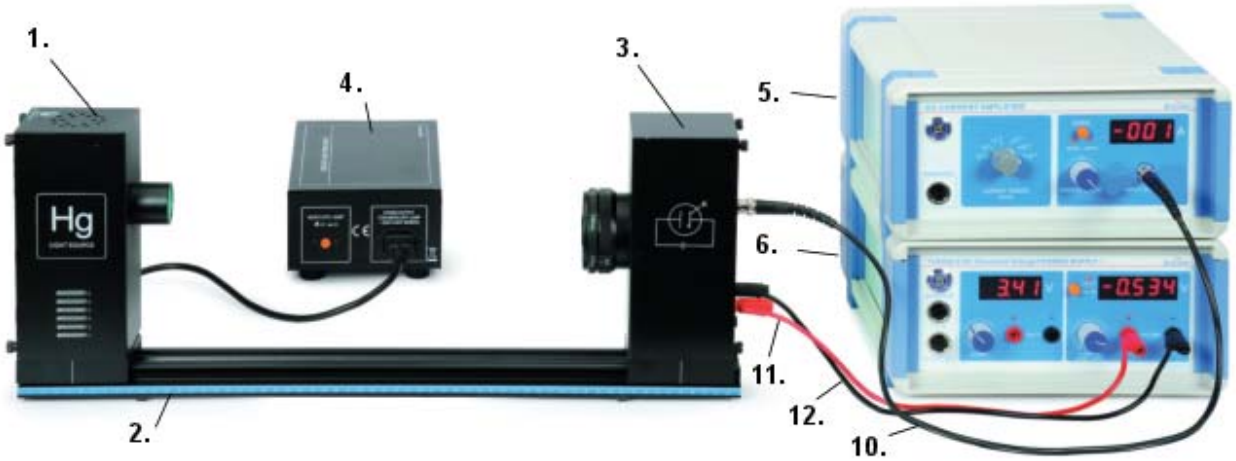

Included Equipment
1. Mercury Light Source Enclosure
2. Track, 60 cm
3. Photodiode Enclosure
4. Mercury Light Source Power Supply
5. DC Current Amplifier
6. Tunable DC (Constant Voltage) Power Supply

Optical Filters, Apertures, and Caps
7. Filter Wheel (365, 405, 436, 546, 577 nm)
8. Aperture Dial (2 mm, 4 mm, 8 mm diameter)
Photodiode Enclosure Cap (not shown)
Mercury Light Source Enclosure Cap (not shown)

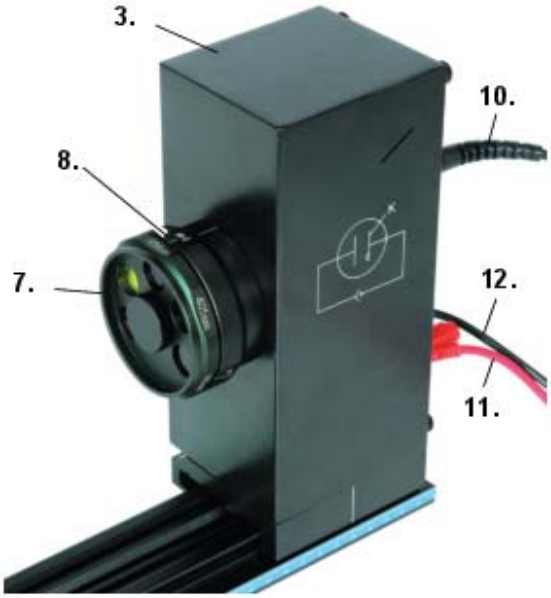

Cables and Cords
9. Power Cord (3) (110 V version shown)
10. BNC Connecting Cable, Photodiode Enclosure
11. Connecting Cable, Red
12. Connecting Cable, Black
13. Interface Cable (3) UI-5219

Recommended Equipment	Model
PASCO 850 Universal Interface	UI-5000
PASCO Capstone Software	UI-5400

Replacement Items	Model
Replacement Mercury Lamp	SE-6597
Replacement Photodiode Tube	SE-6612

Limited Warranty and Limitation of Liability

This Brolight product will be free from defects in material and workmanship for one year from the date of purchase. This warranty does not cover fuses, or damage from accident, neglect, misuse, alteration, contamination, or abnormal conditions of operation or handling. Resellers are not authorized to extend any other warranty on Brolight's behalf. To obtain service during the warranty period, return the unit to point of purchase with a description of the problem.

THIS WARRANTY IS YOUR ONLY REMEDY. NO OTHER WARRANTIES, SUCH AS FITNESS FOR A PARTICULAR PURPOSE, ARE EXPRESSED OR IMPLIED. BROLIGHT IS NOT LIABLE FOR ANY SPECIAL, INDIRECT, INCIDENTAL OR CONSEQUENTIAL DAMAGES OR LOSSES, ARISING FROM ANY CAUSE OR THEORY. Since some states or countries do not allow the exclusion or limitation of an implied warranty or of incidental or consequential damages, this limitation of liability may not apply to you.

Safety Information

Warning: To avoid possible electric shock or personal injury, follow these guidelines:

- Do not clean the equipments with a wet rag.
- Before use, verify that the apparatus is not damaged.
- Do not defeat power cord safety ground feature.
- Plug in to a grounded (earth) outlet.
- Do not use product in any manner not specified by the manufacturer.
- Do not install substitute parts or perform any unauthorized modification to the product.
- Line and Current Protection Fuses: For continued protection against fire, replace the line fuse and the current-protection fuse only with fuses of the specified type and rating.
- Main Power and Test Input Disconnect: Unplug instrument from wall outlet, remove power cord, and remove all probes from all terminals before servicing. Only qualified, service-trained personnel should remove the cover from the instrument.

- Do not use the equipment if it is damaged. Before you use the equipment, inspect the case. Pay particular attention to the insulation surrounding the connectors.
- Do not use the equipment if it operates abnormally. Protection may be impaired. When in doubt, have the equipment serviced.
- Do not operate the equipment where explosive gas, vapor, or dust is present. Don't use it under wet condition.
- Do not apply more than the rated voltage, as marked on the apparatus, between terminals or between any terminal and earth ground.
- When servicing the equipment, use only specified replacement parts.
- Use caution when working with voltage above 30 V AC RMS, 42 V peak, or 60 V DC. Such voltages pose a shock hazard.
- To avoid electric shock, do not touch any naked conductor with hand or skin.
- Adhere to local and national safety codes. Individual protective equipment must be used to prevent shock and arc blast injury where hazardous live conductors are exposed.
- Remaining endangerment: When an input terminal is connected to dangerous live potential it is to be noted that this potential can occur at all other terminals!

Electrical Symbols

Alternating Current
Direct Current
Caution, risk of danger, refer to the operating manual before use.
Caution, possibility of electric shock
Earth (ground) Terminal
Protective Conductor Terminal
Chassis Ground
Conforms to European Union directives.
WEEE, waste electric and electronic equipment
Fuse
On (Power)
Off (Power)
In position of a bi-stable push control
Out position of a bi-stable push control

Introduction

The photoelectric effect is the emission of electrons from the surface of a metal when electromagnetic radiation (such as visible or ultraviolet light) of the right frequency shines on the metal. At the time of its discovery, the classical wave model for light predicted that the energy of the emitted electrons would increase as the intensity (brightness) of the light increased.

Instead it was discovered that the energy of the emitted electrons was directly proportional to the frequency of the incident light, and that no electrons would be emitted if the light source was not above a certain threshold frequency. Lower energy electrons were emitted when light with relatively low frequency was incident on the metal, and higher energy electrons were emitted when light with relatively high frequency was incident on the metal.

About the Apparatus

The SE-6609 Photoelectric Effect Apparatus consists of a mercury light source enclosure, a track, a tunable direct current (DC) constant voltage power supply, a DC current amplifier, a power supply for the mercury light source, miscellaneous cords and cables, a photodiode tube enclosure that has optical filters with five different frequencies and an aperture disk with three different diameters, and protective caps for the photodiode enclosure and the mercury light source enclosure. The photodiode enclosure and the mercury light source enclosure mount on the included track.

The apparatus has several important features:

- The current amplifier has high sensitivity and is very stable in order to improve the accuracy of the measurement.
- The photodiode tube has low levels of dark current and anode reverse current.
- The optical filters are of high quality in order to avoid an error due to interference between different spectral lines.

When connected to a PASCO Interface using PASCO Data Acquisition Software (such as PASCO Capstone), the current and voltage can be measured, recorded, displayed and analyzed.

Background Information

Many people contributed to the discovery and explanation of the photoelectric effect. In 1865 James Clerk Maxwell predicted the existence of electromagnetic waves and concluded that light itself was just such a wave. Experimentalists attempted to generate and detect electromagnetic radiation and the first clearly successful attempt was made in 1886 by Heinrich Hertz. In the midst of his experimentation, he discovered that the spark produced by an electromagnetic receiver was more vigorous if it was exposed to ultraviolet light. In 1888 Wilhelm Hallwachs demonstrated that a negatively charged gold leaf electroscope would discharge more rapidly than normal if a clean zinc disk connected to the electroscope was exposed to ultraviolet light. In 1899, J.J. Thomson determined that the ultraviolet light caused electrons to be emitted from the metal.

In 1902, Phillip Lenard, an assistant to Heinrich Hertz, used a high intensity carbon arc light to illuminate an emitter plate. Using a collector plate and a sensitive ammeter, he was able to measure the small current produced when the emitter plate was exposed to light. In order to measure the energy of the emitted electrons, Lenard charged the collector plate negatively so that the electrons from the emitter plate would be repelled. He found that there was a minimum "stopping" potential that kept all electrons from reaching the collector. He was surprised to discover that the "stopping" potential, V_s - and therefore the energy of the emitted electrons - did *not* depend on the intensity of the light. He found that the maximum energy of the emitted electrons *did* depend on the color, or frequency, of the light.

In 1901 Max Planck published his theory of radiation. In it he stated that an oscillator, or any similar physical system, has a discrete set of possible energy values or levels; energies between these values never occur. Planck went on to state that the emission and absorption of radiation is associated with transitions or jumps between two energy levels. The energy lost or gained by the oscillator is emitted or absorbed as a quantum of radiant energy, the magnitude of which is expressed by the equation: $E = h\nu$ where E equals the radiant energy, ν is the frequency of the radiation, and h is a fundamental constant of nature. (The constant, h, became known as Planck's constant.)

Albert Einstein

In 1905 Albert Einstein gave a simple explanation of Lenard's discoveries using Planck's theory. The new 'quantum'-based model predicted that higher frequency light would produce higher energy emitted electrons (photoelectrons), independent of intensity, while increased intensity would only increase the number of electrons emitted (or photoelectric current). Einstein assumed that the light shining on the emitter material could be thought of as 'quanta' of energy (called photons) with the amount of energy equal to $h\nu$ with ν as the frequency. In the photoelectric effect, one 'quantum' of energy is absorbed by one electron. If the electron is below the surface of the emitter material, some of the absorbed energy is lost as the electron moves towards the surface. This is usually called the 'work function' (W_o). If the 'quantum' is more than the 'work function', then the electron is emitted with a certain amount of kinetic energy. Einstein applied Planck's theory and explained the photoelectric effect in terms of the quantum model using his famous equation for which he received the Nobel prize in 1921: $E = h\nu = KE_{max} + W_0$

where KE_{max} is the maximum kinetic energy of the emitted photoelectron. In terms of kinetic energy, $KE_{max} = h\nu - W_0$

If the collector plate is charged negatively to the 'stopping' potential so that electrons from the emitter don't reach the collector and the photocurrent is zero, the highest kinetic energy electrons will have energy eV where e is the charge on the electron and V is the 'stopping' potential.

$$eV = h\nu - W_0$$

$$V = \frac{h}{e}\nu - \frac{W_0}{e}$$

Einstein's theory predicts that if the frequency of the incident light is varied, and the 'stopping' potential, V, is plotted as a function of frequency, the slope of the line is h/e (see Figure 1).

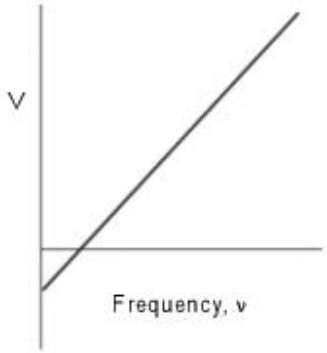

Fig. 1: Stopping Potential, V, versus Frequency

Principle of the Experiment

When incident light shines on the cathode (K), photoelectrons can be emitted and transferred to the anode (A). This constitutes a photocurrent. By changing the voltage between the anode and cathode, and measuring the photocurrent, you can determine the characteristic current-voltage curves of the photoelectric tube.

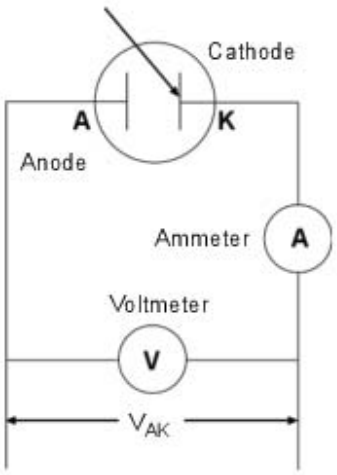

The basic facts of the photoelectric effect experiments are as follows:

- For a given frequency (color) of light, if the voltage between the cathode and anode, V_{AK}, is equal to the stopping potential, V, the photocurrent is zero.
- When the voltage between the cathode and anode is greater than the stopping voltage, the photocurrent will increase quickly and eventually reach saturation. The saturated current is proportional to the intensity of the incident light. See Figure 2.
- Light of different frequencies (colors) have different stopping potentials. See Figure 3
- The slope of a plot of stopping potential versus frequency is the value of the ratio, h/e. See Figure 1.
- The photoelectric effect is almost instantaneous. Once the light shines on the cathode, photoelectrons will be emitted in less than a nanosecond.

Fig. 2: Current vs. Intensity

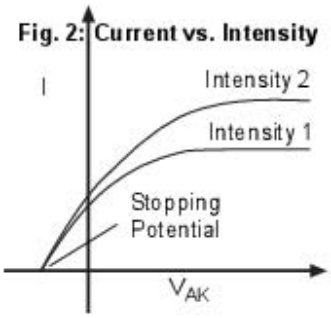

Fig. 3: Current vs. Frequency

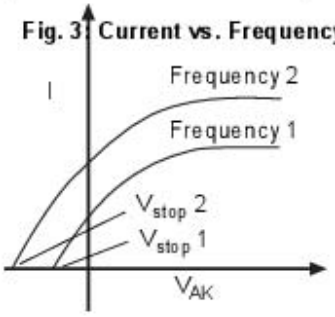

Installation and Maintenance

Mercury Lamp Installation and Replacement

NOTE: The mercury lamp for the Mercury Light Source Enclosure is not shipped inside the enclosure. It must be installed before the apparatus is used for the first time.

WARNING: Before installing or replacing the mercury lamp, be sure to disconnect (unplug) the Mercury Light Source Enclosure from the Mercury Lamp Power Supply.

TOOLS: A flat-blade screwdriver is needed to open the Mercury Light Source Enclosure.

- Use a flat-blade screwdriver to remove the four screws that hold the back plate onto the Mercury Light Source Enclosure.
- Use a flat-blade screwdriver to pry the back plate off of the enclosure.

NOTE: Do not touch the glass envelope of the mercury lamp. Oil and moisture from the skin may damage the lamp's performance. Instead, use gloves, a clean cloth, or a paper towel to handle the mercury lamp.

- Screw the mercury lamp into the socket inside the enclosure.
- Replace the back plate and screws on the enclosure.

Mercury Lamp Specifications

Emitting spectral lines of: 365, 405, 435, 546, and 577 nanometers (nm).

NOTE: Replace the mercury lamp with the same type. See **Replacement Items**.

Photodiode Tube Replacement

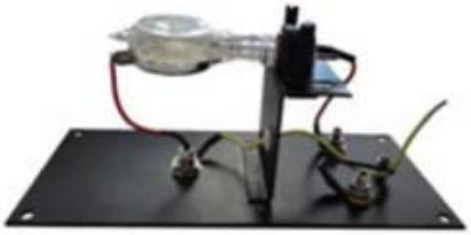

Note: Prolonged exposure of the photodiode tube to light could lead to reduced life or even damage of the tube. Do not leave the photodiode tube unattended. When replacing the photoelectric tube, please do it quickly.

- Use a flat-blade screwdriver to remove the four small screws that hold the back plate onto the photodiode enclosure.
- Use a small flat-blade screwdriver to pry the back plate off of the enclosure.
- Use a flat-blade screwdriver to remove the two small screws that hold the photodiode tube onto the back plate.
- Take out the bad photodiode tube and replace it with the new photodiode tube.
- Replace the back plate and screws on the enclosure.

Photodiode Tube Specifications

Spectral response range: 300-700 nm

Minimum cathode sensitivity: ≥1 μA/Lm

Anode: Nickel ring;

Dark Current: $\leq 20\times10^{-13}$ A ($-4.5V \leq V_{AK} \leq 0V$);

NOTE: Replace the Photodiode Tube with the same type. See **Replacement Items**.

Connect Cords and Cables

NOTE: Before connecting any cords or cables, be sure that all the ON/OFF switches on all parts of the apparatus are in the OFF position.

NOTE: The input power connectors on the power supplies and DC Current Amplifier can be operated at 110 VAC or 220 VAC. Please make sure to select the right setting according to your AC voltage level.

- Connect the power cord from the Mercury Light Source Enclosure into the receptacle labeled "**POWER OUTPUT FOR MERCURY LAMP ~220V**" on the front of the Mercury Lamp Power Supply.

NOTE: The next three cables connect the Photodiode Enclosure to the DC Current Amplifier and the Tunable DC (constant voltage) Power Supply. These three cables will be disconnected during calibration. You do not need to turn off the power of the DC Current Amplifier and the Tunable DC Power Supply when you disconnect and then reconnect these cables during calibration.

- Connect the special BNC-plug-to-BNC-plug cable between the port marked "**K**" on the Photodiode Enclosure and the port labeled "**INPUT SIGNAL**" on the DC Current Amplifier. Align the notches in the BNC plug with the tabs on the BNC port. Push the BNC plug onto the port and twist the plug one-quarter turn clockwise to lock it onto the port.
- Connect the red banana-plug connecting cable between the port marked "**A**" on the Photodiode Enclosure and the red banana-plug port next to the control knob marked "**-4.5V – 0VA**" on the right half of the front of the Tunable DC Power Supply.
- Connect the black banana-plug connecting cable between the port marked with the "down arrow" (symbol for GROUND) on the Photodiode Enclosure and the black banana-plug port next to the control knob marked "**-4.5V – 0VA**" on the right half of the front of the Tunable DC Power Supply.

Connect the power cords for the Mercury Light Source Enclosure, the DC Current Amplifier, and the Tunable DC (constant voltage) Power Supply between the port labeled "**AC POWER CORD, 110-120V/220-240V 50Hz/60Hz**" and an appropriate electrical outlet.

Cord and Cable Specifications

Item	Specification
Power Cord	Length: 1.5 m Rating: 10A/250V
Connecting Cable	Length: 0.85 m Rating: 10A/300V

NOTE: Replace the power cord or connecting cable with the same type.

Fuse Replacement

Open cover to remove fuse. Fuse type: 250V T 2A

WARNING: To reduce the risk of electric shock or damage to the instrument, turn the power switch off and disconnect the power cord before replacing a fuse.

- Disconnect the power cord from the instrument.
- Open the fuse cover and remove the fuse.
- Replace the fuse(s). Use the same type fuses.
- Reconnect the power cord and turn on the instrument.
- If the problem persists, contact Technical Support for advice.

NOTE: Replace the burned fuse with a new fuse of the same type, 250V T 2A.

Tunable DC (Constant Voltage) Power Supply

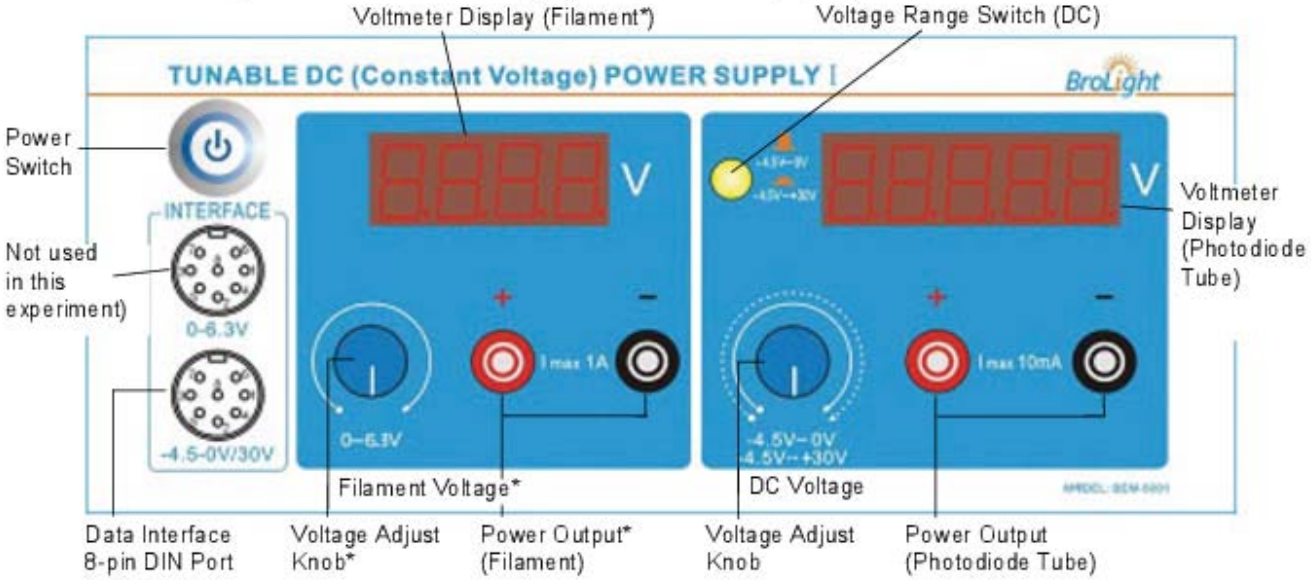

Figure: Tunable DC (Constant Voltage) Power Supply

The Tunable DC (Constant Voltage) Power Supply provides potential to the photodiode tube, which is shown on one of the Voltmeter Displays, and can be recorded using a PASCO Interface and Data Acquisition Software. The Power Supply has two outputs: the DC Voltage with two ranges, -4.5V to 0V and -4.5V to 30V and the Filament Voltage (0 – 6.3V) that is not used.

*NOTE: The Filament Voltage is not used in this experiment

- Power Switch: Turns the power to the instrument ON or OFF.
- Voltmeter Displays: One display shows the potential across the photodiode tube and the other display shows filament voltage (not used in this experiment).
- Voltage Range Switch (DC): Sets the DC voltage range as -4.5V to +30V for plotting current-voltage characteristics and -4.5V to 0 V for measuring the stopping potential.
- Data Interface 8-pin DIN Ports: One port is for measuring the DC Voltage (-4.5V – 0V/30V) and can be connected to the data processing apparatus (PASCO Interface) and the other port is for measuring filament voltage* (0 – 6.3V) and is not used in this experiment.
- Voltage Adjust Knobs: One knob adjusts the potential across the photodiode tube for both DC voltage ranges, and the other knob adjusts the potential for the filament* (not used in this experiment).
- Power Output Ports: One set of ports is for power output to the photodiode tube and the other set is for filament voltage* (not used in this experiment).

DC Current Amplifier

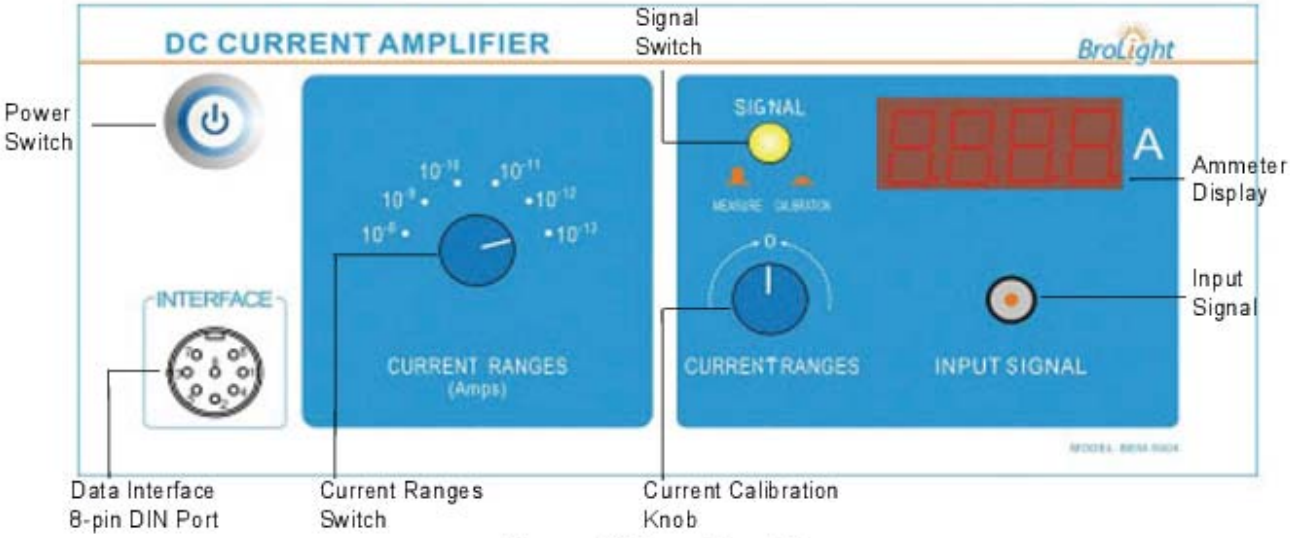

Figure: DC Current Amplifier

- Power Switch: Turns the power to the instrument ON or OFF.
- Data Interface 8-pin DIN Port: Port for connecting the data processing apparatus (PASCO Interface).
- Current Range Switch: Sets the current range for the instrument's current amplifier (10^{-8} to 10^{-13} A).
- Signal Switch: Sets the signal for the photodiode tube to CALIBRATION (button IN) or MEASURE (button OUT).
- Current Calibration Knob: Adjusts the current through the instrument to zero.
- Ammeter Display: Shows the photocurrent through the photodiode tube.
- Input Signal: BNC input port for the photodiode tube signal.

Mounting the Photodiode Enclosure and the Mercury Light Source Enclosure

The photodiode enclosure and the mercury light source enclosure mount on the included 60 cm track. Loosen the thumbscrew that is near the bottom of the side panel of each enclosure. Set the enclosures on the track with the photodiode enclosure facing the mercury light source enclosure. Position the enclosures so that they are about 35 cm apart (as indicated by the metric scale on the side of the track). Tighten the thumbscrew at the bottom of each enclosure to hold it in place on the track.

Measurement Accuracy

Two factors may affect the measurement accuracy. First, the photocurrent is extremely small. Second, because of the cathode dark current and the anode reverse current, the voltage when the photocurrent is zero is not exactly the stopping potential. (For more information, see Experiments in Modern Physics by A. Melissinos, copyright 1966, Harcourt Brace Jovanovich, publishers.)

The apparatus has a very sensitive and stable current amplifier so that the small photocurrent can be measured accurately. The photodiode tube has a low level of dark current and anode reverse voltage. In addition, because stopping potential versus frequency is plotted for several spectral lines and the slope of stopping potential versus frequency is used to calculate Planck's constant, the slope method gives an accurate result even if the stopping potential is not exactly accurate.

Using a PASCO Interface and Data Acquisition Software

Connect to the Interface

Use two of the included 8-pin DIN plug cables to connect the data interface port of the DC Current Amplifier and the "**-4.5 – 0V/30V**" data interface port of the Tunable DC (Constant Voltage) Power Supply to a PASCO Interface (such as the PASCO 850 Universal Interface, the PASCO 750 Interface, or the PASCO 500 Interface). Put the plugs of the two cables into two of the ANALOG INPUT ports on the PASCO interface.

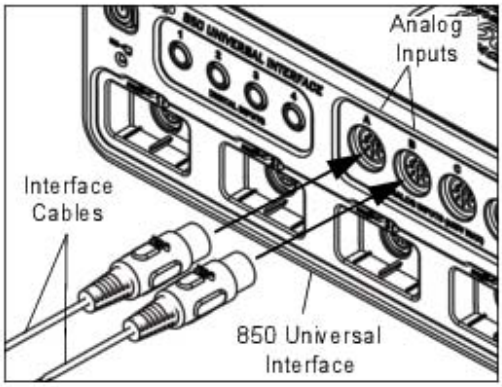

PASCO Capstone Workbook

An electronic workbook file for PASCO Capstone is available at the PASCO web site, www.pasco.com. Enter "EX-5549A" into the 'Search' window and follow the instructions for downloading the Capstone file.

Software Setup

Turn on the interface and start the PASCO Capstone software. The 850 Universal Interface will automatically identify the two pieces of equipment that are connected to it (DC Current Amplifier and Tunable DC Power Supply).

For information about using the equipment with the PASCO 750 Interface or PASCO 500 Interface, please see Appendix D.

Check the Hardware Setup

Click the Hardware Setup icon in the Tools panel to open the Hardware Setup window. The icons for voltage from the DC Power Supply and current from the DC Current Amplifier will appear to be connected to the analog channel icons of the interface icon.

Click the Hardware Setup icon in the Tools panel again to close the Hardware Setup window.

Setup the Data Display

Select one of the configured data display arrangements in the Workbook window, or click-and-drag a data display icon from the Displays palette to the Workbook window.

For example, drag two digits displays into the Workbook window.

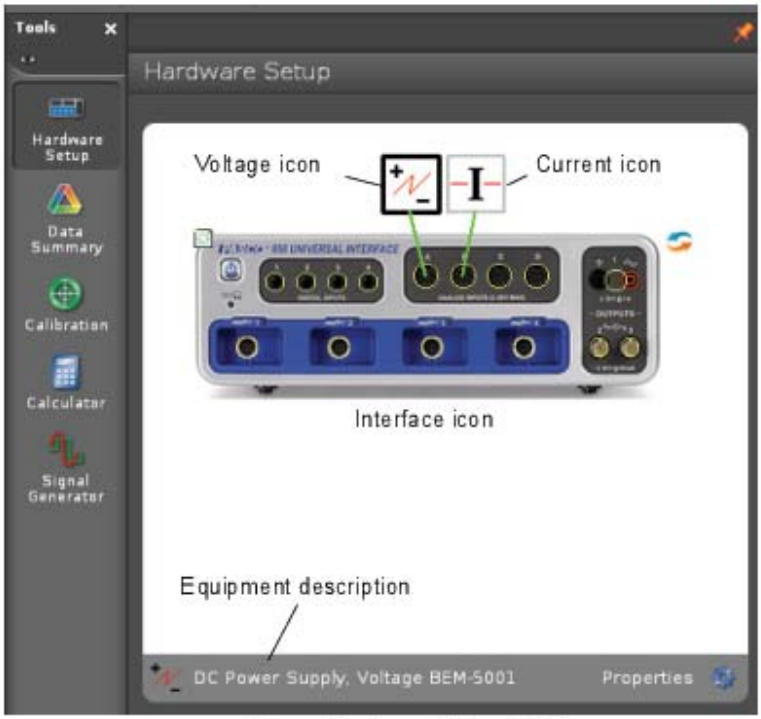

Figure: Hardware Setup Window

Select Measurements

For a pair of digits data displays, for example, click the "Select Measurement" menu icon and select "Voltage (V)". Click the "Select Measurement" menu icon in the other digits display and select "Current (A)".

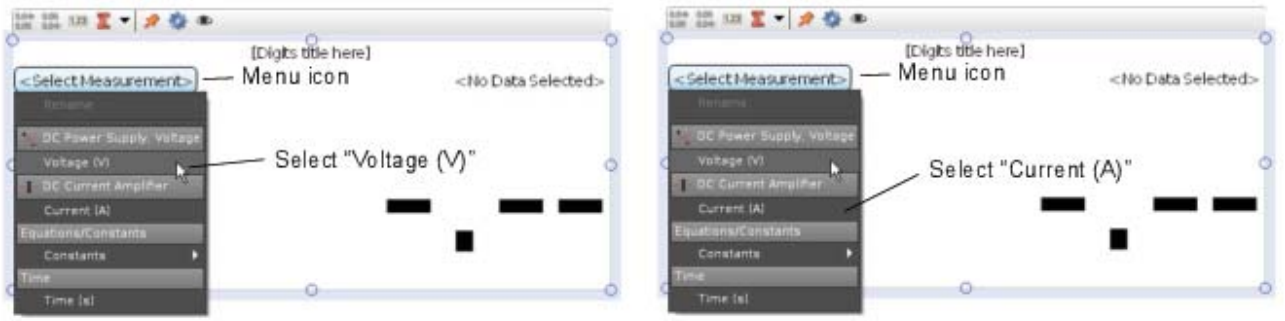

Figure: PASCO Capstone Digits Displays

For this experiment you will select the "Table-Graph" template from the workbook page in the PASCO Capstone software.

Experiment 1 – Planck's Constant, *h*

Measuring and Calculating Planck's Constant, *h*

Preparation before measurement

1. Cover the window of the Mercury Light Source Enclosure with the Mercury Lamp Cap. Cover the window of the Photodiode enclosure with the Photodiode Cap.

2. Adjust the distance between the Mercury Light Source enclosure and Photodiode enclosure so that the general spacing is between 30.0 cm to 40.0 cm. NOTE: The recommended distance is 35.0 cm.

3. On the Mercury Lamp Power Supply, press the button to turn on MERCURY LAMP. On the Tunable DC (Constant Voltage) Power Supply and DC Current Amplifier, push in the POWER button to the ON position.

4. Allow the light source and the apparatus to warm up for 10 minutes.

5. On the Tunable DC (Constant Voltage) Power Supply, set the Voltage Range switch to **-4.5V – 0 V**. On the DC Current Amplifier, turn the CURRENT RANGES switch to **10^{-13} A**.

6. On the DC Current Amplifier, push in the SIGNAL button to the "in" position for CALIBRATION.

NOTE: It is very important to allow the light source and apparatus to warm up for 10 minutes prior to making measurements.

7. Adjust the CURRENT RANGES knob until the ammeter shows that the current is zero.

8. Press the SIGNAL button so it moves to the "out" position for MEASURE.

9. Connect the red and black banana cables from the red and black banana jacks on the photodiode to the red and black banana jacks for the **-4.5V – 0V** output ports on the DC Power Supply.

10. Connect the BNC cable between the photodiode and the BNC port on the DC Current Amplifier.

11. Connect one 8-pin DIN cable from the DC Current Amplifier INTERFACE port to the 850 Universal Interface Channel A.

12. Connect another 8-pin DIN cable from the **-4.5V – 0V** INTERFACE port on the DC Power Supply to the 850 Universal Interface Channel B.

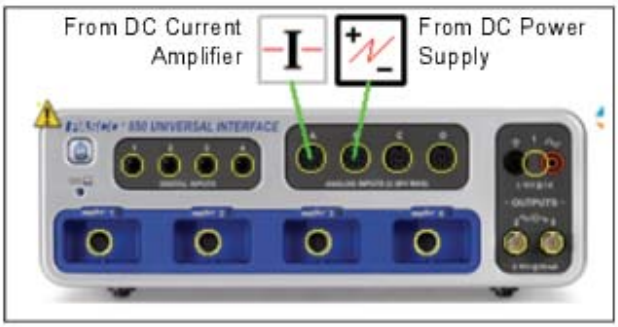

PASCO Capstone Software Configuration

1. In PASCO Capstone, choose the table-graph template and put three columns in the table.

2. In the first column, create a User-Entered data set called **Wavelength** with units of **nm**. In the properties of this measurement, set the symbol to λ (lambda). Enter in the values of the wavelengths of Mercury: 365, 405, 436, 546, 577.

3. Open the calculator in Capstone and create a calculation for the **frequency, f**:

   $f = c/\lambda \times 10^{-5}$ with units of ($\times 10^{14}$ Hz)
   c = [Speed of light (m/s)]
   λ = [Wavelength (nm), ▼]

4. Select the calculation **f** in the second column of the table.

5. In the third column of the table, select the Voltage from the DC Power Supply. Rename the measurement in the column header to "**Stopping Voltage**".

	◆ Set	▲ Set	<No Data Selected>
	Wavelength (nm)	f ($x10^{14}$Hz)	⚠ Stopping Voltage (V)
1	365	8.21	
2	405	7.40	
3	436	6.88	
4	546	5.49	
5	577	5.20	

6. Change the sampling mode on the Sampling Control Bar from **Continuous Mode** to **Keep Mode**.

7. On the graph, select **Stopping Voltage** on the vertical axis and **f** (frequency) on the horizontal axis.

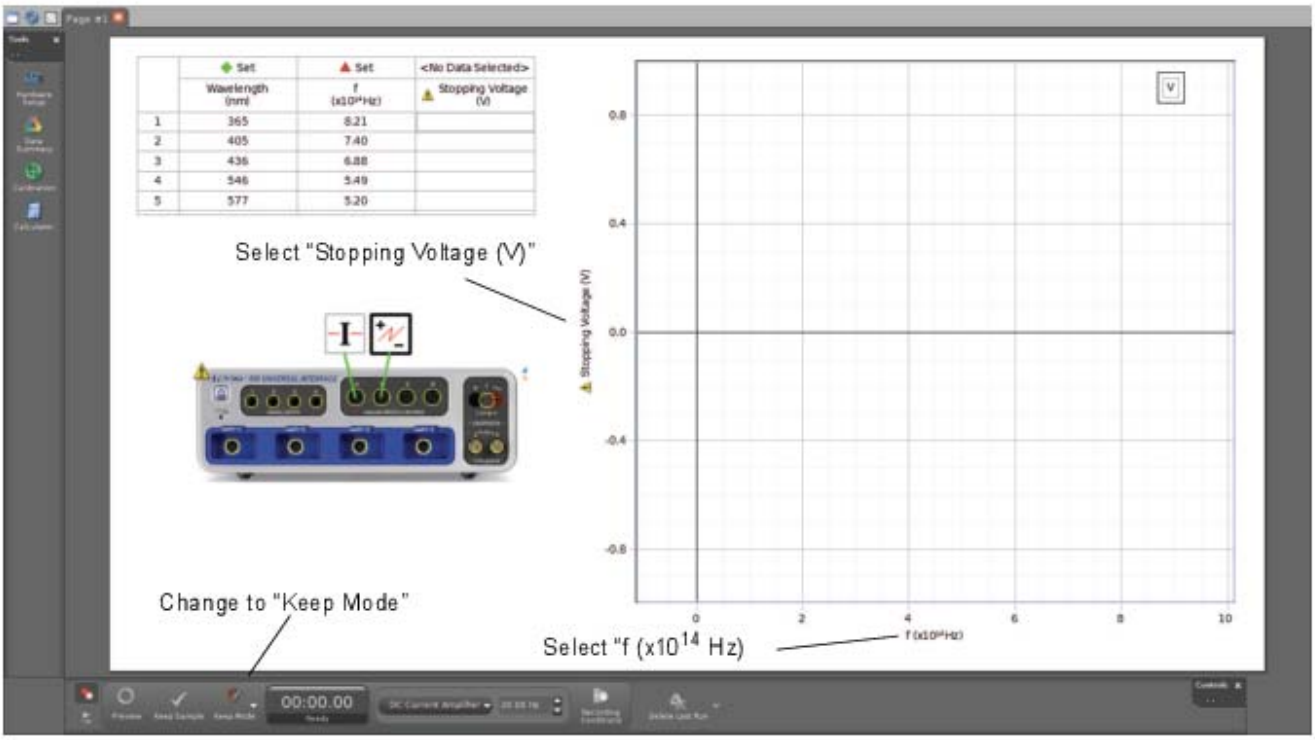

Measurement

1. Gently pull the aperture dial away from the case of the Photodiode Enclosure and rotate the dial so that the 4 mm diameter aperture is aligned with the white line. Then rotate the filter wheel until the 365 nm filter is aligned with the white line. Finally, remove the cover cap.

WARNING: The Mercury Light Source Enclosure cap is very warm. Protect your hand!

2. Uncover the window of the Mercury Light Source. Spectral lines of 365 nm wavelength will shine on the cathode in the phototube.
3. Start previewing in Capstone and click the first row in the table display
4. Adjust the VOLTAGE ADJUST knob on the DC Power Supply until the digital meter on the DC Current Amplifier shows that the current is zero.
5. Press "Keep Sample" on the Sample Control bar to record the magnitude of the stopping potential for the 365 nm wavelength in the table display.
6. Rotate the filter wheel until the 405 nm filter is aligned with the white line. Spectral lines of 405 nm wavelength will shine on the cathode in the phototube.
7. Adjust the VOLTAGE ADJUST knob on the DC Power Supply until the digital meter on the DC Current Amplifier shows that the current.
8. Click the second row of the table display and press "Keep Sample" to record the magnitude of the magnitude of the stopping potential for the 405 nm wavelength in table display.
9. Repeat the measurement procedure for the other three filters. Record the magnitude of the stopping potential for each wavelength in the table, and then press "Stop" in the software.
10. Turn off the MERCURY LAMP power switch and the POWER switch on the other pieces of equipment. Rotate the filter wheel until the 0 nm filter is aligned with the white line. Cover the windows of the Mercury Light Source Enclosure and Photodiode Enclosure.

Calculating

1. Plot a graph of Stopping Potential (V) versus Frequency (x 10^{14} Hz).
2. Find the slope of the best-fit line through the data points on the Stopping Potential (V) versus Frequency (x 10^{14} Hz) graph.

Note: The slope is the ratio of h/e, so Planck's constant, h, is the product of the charge of the electron ($e = 1.602 \times 10^{-19}$ C) and the slope of the best-fit line.

3. Record the calculated slope and use it to calculate the value of Planck's constant, h.

   Slope = _____ ± _____

   h = e x slope = _____ ± _____

4. Use the "±" value for the slope as the error in the slope and round your result to the appropriate value. Compare your calculated value of h to the accepted value, h_0, 6.626×10^{-34} J s.

$$\textbf{percent difference} = \left|\frac{h - h_0}{h_0}\right| x100$$

5. Record your percent difference $|(h - h_0)/h_0| \times 100\%$ = _____

Questions

1. How does your calculated value of h compare to the accepted value?
2. What do you think may account for the difference – if any – between your calculated value of h and the accepted value?

3. How can you find the value of the Work Function from the graph of Stopping Potential versus Frequency?

Extension

Repeat the data measurement and analysis procedure for the other two aperture diameters, 2 mm and 8 mm.

Questions

1. How does your calculated value of h for each different aperture compare to the accepted value, h_0, 6.626×10^{-34} J s?
2. How does light intensity affect the Stopping Potential?

Experiment 2 – Measuring Current-Voltage Characteristics 1

Measuring Current-Voltage Characteristics of Spectral Lines - Constant Frequency, Different Intensity

This section outlines the instructions for measuring and comparing the current versus voltage characteristics of one spectral line at three different light intensities.

Preparation for Measurement

1. Cover the window of the Mercury Light Source enclosure with the Mercury Lamp Cap. Cover the window of the Photodiode enclosure with the Photodiode Cap.
2. Adjust the distance between the Mercury Light Source enclosure and Photodiode enclosure so that the general spacing is between 30.0 cm to 40.0 cm. NOTE: The recommended distance is 35.0 cm.
3. On the Mercury Lamp Power Supply, press the button to turn on MERCURY LAMP. On the Tunable DC (Constant Voltage) Power Supply and DC Current Amplifier, push in the POWER button to the ON position.
4. Allow the light source and the apparatus to warm up for 10 minutes.
5. On the DC (Constant Voltage) Power Supply, set the Voltage Range switch to **-4.5V – 30 V**. On the DC Current Amplifier, turn the CURRENT RANGES switch to $\mathbf{10^{-11}}$ A. (If 10^{-11}A is not large enough, please turn the CURRENT RANGES Switch to 10^{-10}A.)
6. Push in the SIGNAL button to the "in" position for CALIBRATION.
7. Adjust the CURRENT RANGES knob until the ammeter shows that the current is zero.
8. Press the SIGNAL button so it moves to the "out" position for MEASURE.

NOTE: It is very important to allow the light source and apparatus to warm up for 10 minutes prior to making measurements.

Measurement - Constant Frequency, Different Intensities

2 mm Aperture

1. Gently pull the aperture dial away from the Photodiode Enclosure and rotate the dial so that the 2 mm aperture is aligned with the white line. Then rotate the filter wheel until the 436 nm filter is aligned with the white line. Finally remove the cover cap.
2. Uncover the window of the Mercury Light Source. Spectral lines of 436 nm wavelength will shine on the cathode in the phototube.
3. Adjust the **-4.5V– 30V** VOLTAGE ADJUST knob until the current on the ammeter is zero. Record the voltage and current in Table 4.
4. Increase the voltage by a small amount (for example, 2 V). Record the new voltage and current in Table 4.
5. Continue to increase the voltage by the same small increment. Record the new voltage and current each time in Table 4. Stop when you reach the end of the VOLTAGE range.

WARNING: The Mercury Light Source Enclosure cap is very warm. Protect your hand!

4 mm Aperture

1. Cover the windows of the Mercury Light Source Enclosure and the Photodiode Enclosure.
2. Gently pull the aperture dial and rotate it so that the 4 mm aperture is aligned with the white line. Then rotate the filter wheel until the 436 nm filter is aligned with the white line. Finally remove the cover cap.

3. Uncover the window of the Mercury Light Source. Spectral lines of 436 nm will shine on the cathode in the Photodiode Enclosure.

4. Adjust the **-4.5V– 30V** VOLTAGE ADJUST knob so that the current display is zero. Record the voltage and current in Table 4.

5. Increase the voltage by a small amount (e.g., 2 V) and record the new voltage and current in Table 4. Continue to increase the voltage by the same small increment and record the new voltage and current each time in Table 4. Stop when you reach the end of the VOLTAGE range.

8 mm Aperture

1. Cover the windows of the Mercury Light Source Enclosure and the Photodiode Enclosure.

2. Gently pull the aperture dial and rotate it so that the 8 mm aperture is aligned with the white line. Then rotate the filter wheel until the 436 nm filter is aligned with the white line. Finally remove the cover cap.

3. Uncover the window of the Mercury Light Source. Spectral lines of 436 nm will shine on the cathode in the Photodiode enclosure.

4. Adjust the **-4.5V– 30V** VOLTAGE ADJUST knob so that the current display is zero. Record the voltage and current in Table 4.

5. Increase the voltage by a small amount (e.g., 2 V) and record the new voltage and current in Table 4. Continue to increase the voltage by the same small increment and record the new voltage and current each time in Table 4. Stop when you reach the end of the VOLTAGE range.

6. Turn off the MERCURY LAMP power switch and the POWER switch on the other pieces of equipment. Rotate the filter wheel until the 0 nm filter is aligned with the white line. Cover the windows of the Mercury Light Source Enclosure and Photodiode Enclosure.

Table 1: Current and Voltage of Spectral Lines.

λ = 436 nm 2 mm dia.	V (V)												
	I (x 10^{-11} A)												
λ = 436 nm 4 mm dia.	V (V)												
	I (x 10^{-11} A)												
λ = 436 nm 8 mm dia.	V (V)												
	I (x 10^{-11} A)												

Analysis

1. Plot the graphs of Current (y-axis) versus Voltage (x-axis) for the one spectral line, 436 nm, at the three different intensities.

Questions

1. How do the curves of current versus voltage for the one spectral line at three different intensities compare? In other words, how are the curves similar to each other?

2. How do the curves of current versus voltage for the one spectral line at three different intensities contrast? In other words, how do the curves differ from each other.

Experiment 3 – Measuring Current-Voltage Characteristics 2

Measuring Current-Voltage Characteristics of Spectral Lines - Different Frequencies, Constant Intensity

This section outlines the instructions for measuring and comparing the current versus voltage characteristics of three spectral lines, 365 nm, 405 nm, and 436 nm, but with the same light intensity.

Preparation for Measurement

1. Cover the window of the Mercury Light Source enclosure with the Mercury Lamp Cap. Cover the window of the Photodiode enclosure with the Photodiode Cap.
2. Adjust the distance between the Mercury Light Source enclosure and Photodiode enclosure so that the general spacing is between 30.0 cm to 40.0 cm. NOTE: The recommended distance is 35.0 cm.
3. On the Mercury Lamp Power Supply, press the button to turn on MERCURY LAMP. On the Tunable DC (Constant Voltage) Power Supply and DC Current Amplifier, push in the POWER button to the ON position.
4. Allow the light source and the apparatus to warm up for 10 minutes.
5. On the DC (Constant Voltage) Power Supply, set the Voltage Range switch to **-4.5V – 30 V**. On the DC Current Amplifier, turn the CURRENT RANGES switch to $\mathbf{10^{-11}}$ A. (If 10^{-11}A is not large enough, please turn the CURRENT RANGES Switch to 10^{-10}A.)
6. Push in the SIGNAL button to the "in" position for CALIBRATION.
7. Adjust the CURRENT RANGES knob until the ammeter shows that the current is zero.
8. Press the SIGNAL button so it moves to the "out" position for MEASURE.

NOTE: It is very important to allow the light source and apparatus to warm up for 10 minutes prior to making measurements.

Measurement - Different Frequencies, Constant Intensity

365 nm Wavelength

1. Gently pull the aperture dial and rotate it so that the 4 mm aperture is aligned with the white line. Then rotate the filter wheel until the 365 nm filter is aligned with the white line. Finally remove the cover cap.
2. Uncover the window of the Mercury Light Source Enclosure. Spectral lines of 365 nm will shine on the cathode in the Photodiode Enclosure.
3. Adjust the **-4.5V– 30V** VOLTAGE ADJUST knob so that the current display is zero. Record the voltage and current in Table 5.
4. Increase the voltage by a small amount (for example, 2 V). Record the new voltage and current in Table 5.
5. Continue to increase the voltage by the same small increment. Record the new voltage and current each time in Table 5. Stop when you reach the end of the VOLTAGE range.

WARNING: The Mercury Light Source Enclosure cap is very warm. Protect your hand!

405 nm Wavelength

1. Cover the window of the Mercury Light Source Enclosure.
2. Rotate the filter wheel until the 405 nm filter is aligned with the white line.

3. Uncover the window of the Mercury Light Source enclosure. Spectral lines of 405 nm will shine on the cathode in the Photodiode Enclosure.

4. Adjust the **-4.5V– 30V** VOLTAGE ADJUST knob so that the current display is zero. Record the voltage and current in Table 5.

5. Increase the voltage by a small amount (e.g., 2 V) and record the new voltage and current in Table 5.

6. Continue to increase the voltage by the same small increment and record the new voltage and current each time in Table 5. Stop when you reach the end of the VOLTAGE range.

436 nm Wavelength

1. Cover the window of the Mercury Light Source Enclosure.

2. Rotate the filter wheel until the 436 nm filter is aligned with the white line.

3. Uncover the window of the Mercury Light Source Enclosure. Spectral lines of 436 nm will shine on the cathode in the Photodiode enclosure.

4. Adjust the **-4.5V– 30V** VOLTAGE ADJUST knob so that the current display is zero. Record the voltage and current in Table 5.

5. Increase the voltage by a small amount (e.g., 2 V) and record the new voltage and current in Table 5.

6. Continue to increase the voltage by the same small increment and record the new voltage and current each time in Table 5. Stop when you reach the end of the VOLTAGE range.

7. Turn off the MERCURY LAMP power switch and the POWER switch on the other pieces of equipment. Rotate the filter wheel until the 0 nm filter is aligned with the white line. Cover the windows of the Mercury Light Source Enclosure and Photodiode Enclosure.

Table 2: Current and Voltage of Spectral Lines

λ = 365 nm 4 mm dia.	V (V)												
	I (x 10^{-11} A)												
λ = 405 nm 4 mm dia.	V (V)												
	I (x 10^{-11} A)												
λ = 436 nm 4 mm dia.	V (V)												
	I (x 10^{-11} A)												

Analysis

1. Plot the graphs of Current (y-axis) versus Voltage (x-axis) for the three spectral lines, 365 nm, 405 nm, and 436 nm, at the one intensity.

Questions

1. How do the curves of current versus voltage for the three spectral lines at a constant intensity compare? In other words, how are the curves similar to each other?

2. How do the curves of current versus voltage for the three spectral lines at a constant intensity contrast? In other words, how do the curves differ from each other.

Appendix A: Specifications

Supply voltage: 110-120V~/220-240V~

Mains supply voltage fluctuations: ±10%

Frequency: 50/60Hz

Fuse Protection for inputs: 250 V T 2A

Display: 3-1/2 or 4-1/2 Digit Display

Using site: Indoor use

Temperature: Operating: 0°C to 40 °C, Storage: -20 °C to 50 °C

Operating Altitude: 0 to 2000 meters

Relative Humidity: Non-condensing < 10 °C, 90% from 10 °C to 30 °C; 75% from 30 °C to 40 °C

Pollution degree: 2

Mercury Lamp Life: >2000 Hours

Certifications: CE

Safety Compliance: IEC/EN 61010-1

Over-voltage category: II

Degree of protection: IP20

Normal energy protection: 5J

Item	Description
Tunable DC (Constant Voltage) Power Supply	0 – 6.3 VDC, I ≤ 1A (ripple < 1%), 3.5 Digit Display; -4.5 – 0VDC/-4.5 – 30VDC (ripple < 1%) (Two ranges), I ≤ 10mA, 4.5 Digit Display;
DC Current Amplifier	Current range: 10^{-8}A to 10^{-13}A, in six ranges; 3.5 Digit Display; Zero drift: ≤ ±0.2% of full range reading in 30 minutes at the range of 10^{-13}A (after a 20 minute warm-up)
Optical filters	Five filters with central wavelengths of 365, 405, 436, 546, and 577 nm
Optical Apertures	2 mm, 4 mm, and 8 mm diameter
Mercury lamp	Emitting spectral lines of 365, 405, 436, 546, and 577 nm
Photodiode Tube	Spectral response range: 300 to 700 nm Minimum cathode sensitivity: ≥1≥μA/Lm Anode: Nickel ring Dark Current: ≤20×10^{-13}A (-4.5V≤V_{AK}≤0V)
Mercury Lamp Power Supply	Input: 110–120 V/220–240V, 50/60Hz; Output: 220VAC, 200W
Track	Length: 60 cm (0.60 m)

Appendix B: Teacher's Notes

Sample Data

Experiment 1: Measuring and Calculating Planck's Constant, *h*

The following table shows typical data for Stopping Voltage of Spectral Lines for the 2 mm diameter aperture.

Stopping Potential of Spectral Lines, 2 mm diameter Aperture

Item	1	2	3	4	5
Wavelength, λ (nm)	365	405	436	546	577
Frequency, ν=c/λ, (x 10^{14} Hz)	8.214	7.408	6.879	5.490	5.196
Stopping Potential, V (V)	*-1.805*	*-1.408*	*-1.235*	*-0.661*	*-0.546*

The slope value of 0.4109 V/10^{14} Hz gives a value for Planck's constant, of h = 6.582 x 10^{-34} J s. This value has a 0.66% difference with the accepted value, h_0 = 6.626 x 10^{-34} J s.

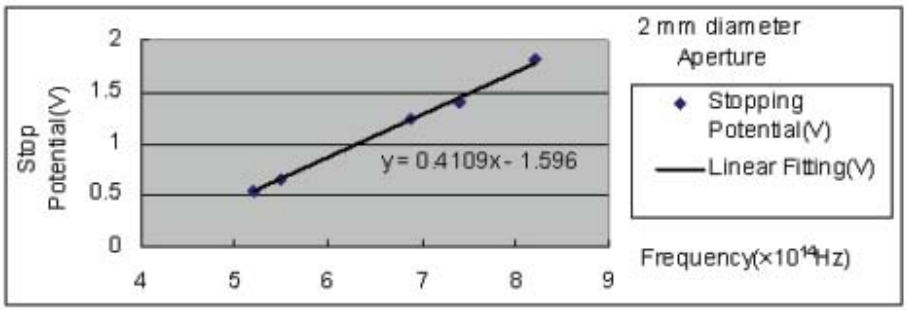

The following table shows typical data for Stopping Voltage of Spectral Lines for the 4 mm diameter aperture.

Stopping Potential of Spectral Lines, 4 mm diameter Aperture

Item	1	2	3	4	5
Wavelength, λ (nm)	365	405	436	546	577
Frequency, ν=c/λ, (x 10^{14} Hz)	8.214	7.408	6.879	5.490	5.196
Stopping Potential, V (V)	*-1.819*	*-1.414*	*-1.238*	*-0.660*	*-0.542*

The slope value of 0.4161 V/10^{14} Hz gives a value for Planck's constant of h = 6.666 x 10^{-34} J s. This value has a 0.60% difference with the accepted value, h_0 = 6.626 x 10^{-34} J s.

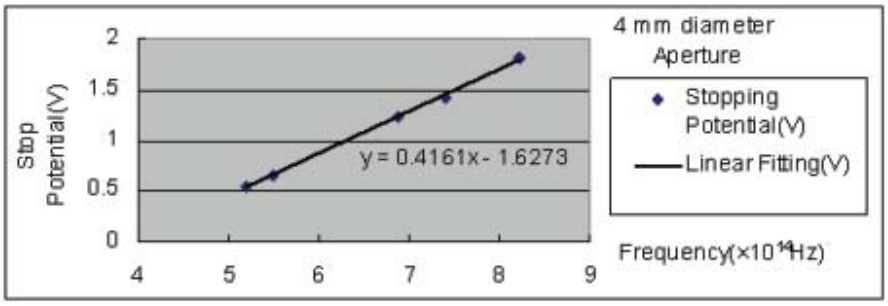

The following table shows typical data for Stopping Voltage of Spectral Lines for the 8 mm diameter aperture.

Stopping Potential of Spectral Lines, 8 mm diameter Aperture

Item	1	2	3	4	5
Wavelength, λ (nm)	365	405	436	546	577
Frequency, ν=c/λ, (x 10^{14} Hz)	8.214	7.408	6.879	5.490	5.196
Stopping Potential, V (V)	*-1.817*	*-1.413*	*-1.237*	*-0.660*	*-0.545*

The slope value of 0.4148 V/10^{14} Hz gives a value for Planck's constant of h = 6.645 x 10^{-34} J s. This value has a 0.28% difference with the accepted value, h_0 = 6.626 x 10^{-34} J s.

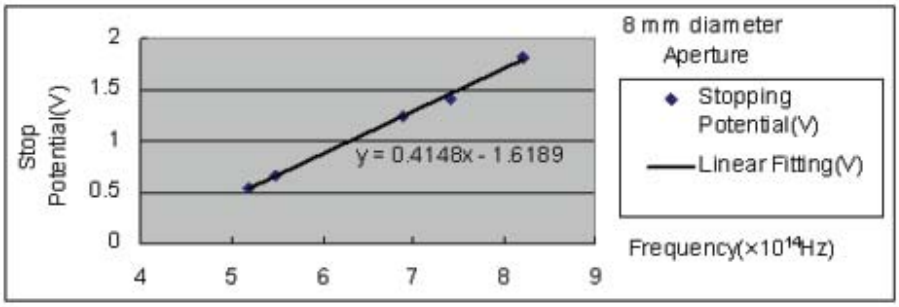

Experiment 2: Measuring Current-Voltage Characteristics

Current-Voltage Characteristics of Spectral Lines Constant Frequency, Different Intensity

The following table shows typical data for current and voltage for one spectral line (436 nm) for three different intensities.

Current and Voltage, Constant Frequency, Different Apertures

Voltage(V)	Current (436nm) $\times 10^{-11}$ A		
	2 mm dia	4 mm dia	8 mm dia
-4			
-2	0	0	0
0	11	44	220
2	35	136	610
4	49	193	860
6	62	242	1060
8	73	292	1270
10	83	336	1430
12	92	362	1580
14	102	405	1730
16	109	431	1850
18	117	459	1960
20	122	483	2080
22	130	507	2180
24	134	534	2280
26	141	552	2390
28	144	568	2460
30	147	581	2540

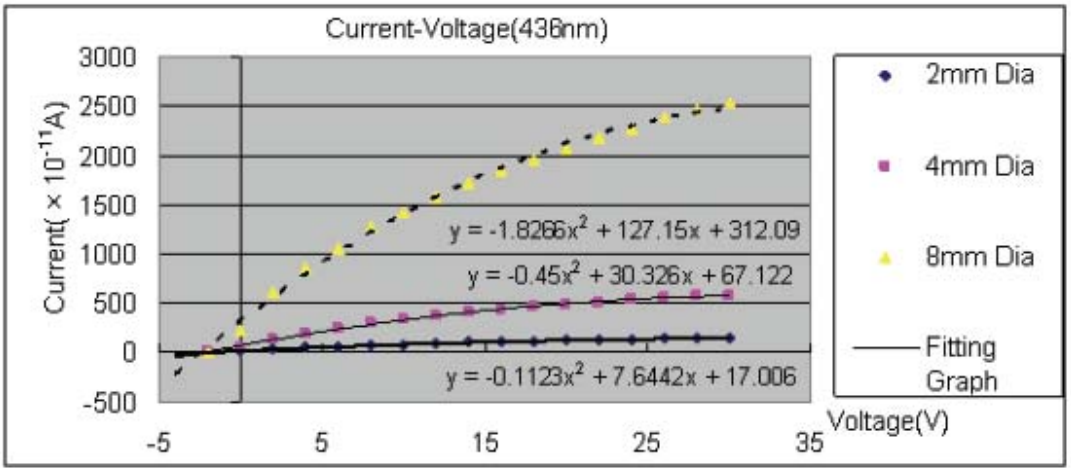

Experiment 3: Measuring Current-Voltage Characteristics

Current-Voltage Characteristics of Spectral Lines: Different Frequencies, Constant Intensity

The following table shows typical data for current and voltage for three spectral lines (365, 405, and 436 nm) for one aperture (4 mm diameter).

Current and Voltage, Different Frequencies, Constant Aperture

4 mm dia.	Current($\times 10^{-11}$A)		
Voltage(V)	365nm	405nm	436nm
-4			
-2	0	0	0
0	180	25	44
2	500	87	136
4	700	121	193
6	890	155	242
8	1110	189	292
10	1300	218	336
12	1480	243	362
14	1640	268	405
16	1760	288	431
18	1900	303	459
20	2050	324	483
22	2160	345	507
24	2250	360	534
26	2350	373	552
28	2400	385	568
30	2490	394	581

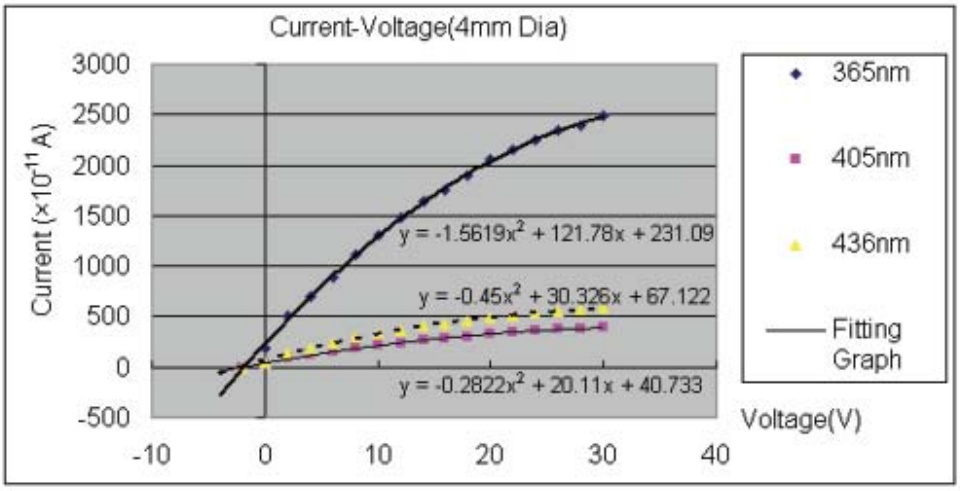

Questions: Experiment 1 - Planck's Constant

1. How does your calculated value of *h* compare to the accepted value?

The calculated value of *h* for the 4 mm diameter aperture is within 1.8% of the accepted value of *h*. Student answers will vary.

2. What do you think may account for the difference - if any - between your calculated value of *h* and the accepted value?

Student answers will vary. One possible reason for the difference is this: Because the photocurrent is so small, it is somewhat difficult to set the VOLTAGE ADJUST knob to the precise value of stopping potential that will cause the photocurrent to be zero. In addition, nearby electronic devices such as computer monitors may influence the sensitive meters in the apparatus.

3. How can you find the Work Function from the graph of Stopping Potential versus Frequency?

The work function divided by the charge of the electron, *e*, is the y-intercept on the graph. Multiply the value of the y-intercept by *e* to find the value of the work function, W_0.

Extension Questions:

1. How does your calculated value of *h* for each different aperture compare to the accepted value, $h_0 = 6.626 \times 10^{-34}$ J•s?

Answers will vary.

2. How does light intensity affect the Stopping Potential?

Light intensity does not appreciably affect the Stopping Potential.

Questions: Experiment 2 - Constant Frequency

1. How do the curves of current versus voltage for the one spectral line at three different intensities compare? In other words, how are the curves similar to each other?

The current versus voltage curves for one spectral line and three different intensities are similar in that the stopping potential, -1.1 V, is the same for all three curves. The curves have the same overall shape.

2. How do the curves of current versus voltage for the one spectral line at three different intensities contrast? In other words, how do the curves differ from each other?

The current versus voltage curves for one spectral line and three different intensities are different in the following way: The amount of photocurrent increases as the size of the apertures increase. Increased intensity increases the amount of photocurrent.

Questions: Experiment 3 - Constant Intensity

1. How do the curves of current versus voltage for the three spectral lines at a constant intensity compare? In other words, how are the curves similar to each other?

The current versus voltage curves have similar overall shapes.

2. How do the curves of current versus voltage for the three spectral lines at a constant intensity contrast? In other words, how do the curves differ from each other?

The current versus voltage curves differ in that each curve has a different stopping potential. The stopping potentials increase as the frequency increases (or wavelength decreases).

Appendix C: Technical Support

For assistance with the Photoelectric Effect Apparatus (SE-6609) or any other PASCO products, contact PASCO at:

Address:	PASCO scientific 10101 Foothills Blvd. Roseville, CA 95747	Web:	www.pasco.com
Phone:	+1 916 786 3800 (worldwide) (800) 772-8700 (USA)	Email:	support@pasco.com

Limited Warranty

For a description of the product warranty, see the PASCO catalog or the PASCO web site at www.pasco.com.

Copyright

The PASCO scientific *Photoelectric Effect Apparatus* manual is copyrighted and all rights reserved. However, permission is granted to non-profit educational institutions for reproduction of any part of the *Photoelectric Effect Apparatus* manual, providing the reproductions are used only for their laboratories and are not sold for profit. Reproduction under any other circumstances, without the written consent of PASCO scientific, is prohibited.

Trademarks

PASCO, PASCO scientific, and PASCO Capstone are trademarks or registered trademarks of PASCO scientific in the United States and in other countries. For more information visit www.pasco.com/legal.

Appendix D: Information about Using a PASCO ScienceWorkshop Interface and Software

Using the Photoelectric Effect Apparatus with a 750 or 500 ScienceWorkshop Interface

Unlike the 850 Universal Interface, a 750 or 500 ScienceWorkshop Interface will not automatically detect and recognize the Tunable DC (Constant Voltage) Power Supply and the DC Current Amplifier. However, these interfaces can still be used with PASCO Capstone to detect the signals from these instruments.

1. Use an included UI-5219 8-Pin DIN male-to-male cable to connect each of the instruments to an analog channel on the 750 or 500 interface.
2. In the PASCO Capstone Hardware Setup window, click the icon of the analog port that is connected to the DC Power Supply and choose "DC Power Supply, Voltage" from the list.
3. In the PASCO Capstone Hardware Setup window, click the icon of the analog port that is connected to the Current Amplifier and choose "Current Amplifier" from the list.
4. Create two digits displays in PASCO Capstone and choose the Current for one display and the Voltage for the other. Click "Record" and these displays will show the current from the Current Amplifier in amps and the voltage from the DC Power Supply in volts.

Calibration of the Interface Connections:

1. The actual voltage reading from the DC Power Supply Voltage interface connection is multiplied by 10 in the software so it matches the digital readout on the DC Power Supply. For instance, if the DC Power Supply Voltage digital display reads -1.42 V, the interface output will be -0.142 V, but the software will correctly report -1.42 V.

2. The actual voltage reading from the DC Power Supply "Filament" (0-6.3V) interface connection is the same as the digital readout on the DC Power Supply (0-6.3V). No multiplication factor is necessary.

3. The interface connection for the DC Current Amplifier outputs a voltage equal to the digital readout divided by 1000. The software multiplies by 1000 and also by the range. For instance, if the digital readout reads 21 when the range switch is set on 10^{-13}A, then the output voltage of the interface connection is 0.021 V, but the software will correctly convert this to 2.1×10^{-12}A.

4. If you are using software other than PASCO Capstone, identify the DC Power Supply and the DC Current Amplifier as "Voltage Sensors" and use the calculator in the software to convert the voltage readings to the proper scale.

Appendix E: Product End of Life Disposal Instructions

Product End of Life Disposal Instructions:

This electronic product is subject to disposal and recycling regulations that vary by country and region. It is your responsibility to recycle your electronic equipment per your local environmental laws and regulations to ensure that it will be recycled in a manner that protects human health and the environment. To find out where you can drop off your waste equipment for recycling, please contact your local waste recycle/disposal service, or the place where you purchased the product.

The European Union WEEE (Waste Electronic and Electrical Equipment) symbol here and on the product or on its packaging indicates that this product must not be disposed of in a standard waste container.

Mercury Bulb Disposal Instructions:

Mercury Bulbs contain chemicals that, if released, may affect the environment and human health. Mercury Bulbs should be collected separately for recycling, and recycled at a local hazardous material disposal location adhering to your country and local government regulations. To find out where you can drop off your waste Mercury Bulbs for recycling, please contact your local waste disposal service, or the place where you purchased the product.